1-800-BOLLARDS

The Bollard Experts

REVISIONS			
LTR	DESCRIPTION	DATE	APPVD

COMMENTS

SPECIFICATIONS
HEIGHT: 35.43"
DIAMETER: 4.18"
WALL THICKNESS: 0.125"

- ☐ 4" MANUAL RETRACTABLE BOLLARD MATERIAL
- ☐ CARBON STEEL
  - ☐ MRCS4000DB (DUAL LOCKING / BLACK)
  - ☐ MRCS4000DY (DUAL LOCKING / YELLOW)
  - ☐ MRCS4000B (SINGLE LOCKING / BLACK)
  - ☐ MRCS4000Y (SINGLE LOCKING / YELLOW)
- ☐ 316 STAINLESS STEEL
  - ☐ MRSS4000DB (DUAL LOCKING)
  - ☐ MRSS4000B (SINGLE LOCKING)
- ☐ STAINLESS STEEL BOLLARD FINISH
  - ☐ POLISHED #4

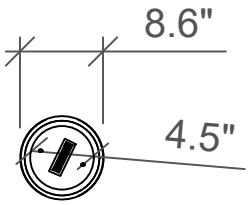

TOP VIEW

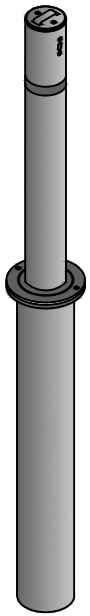

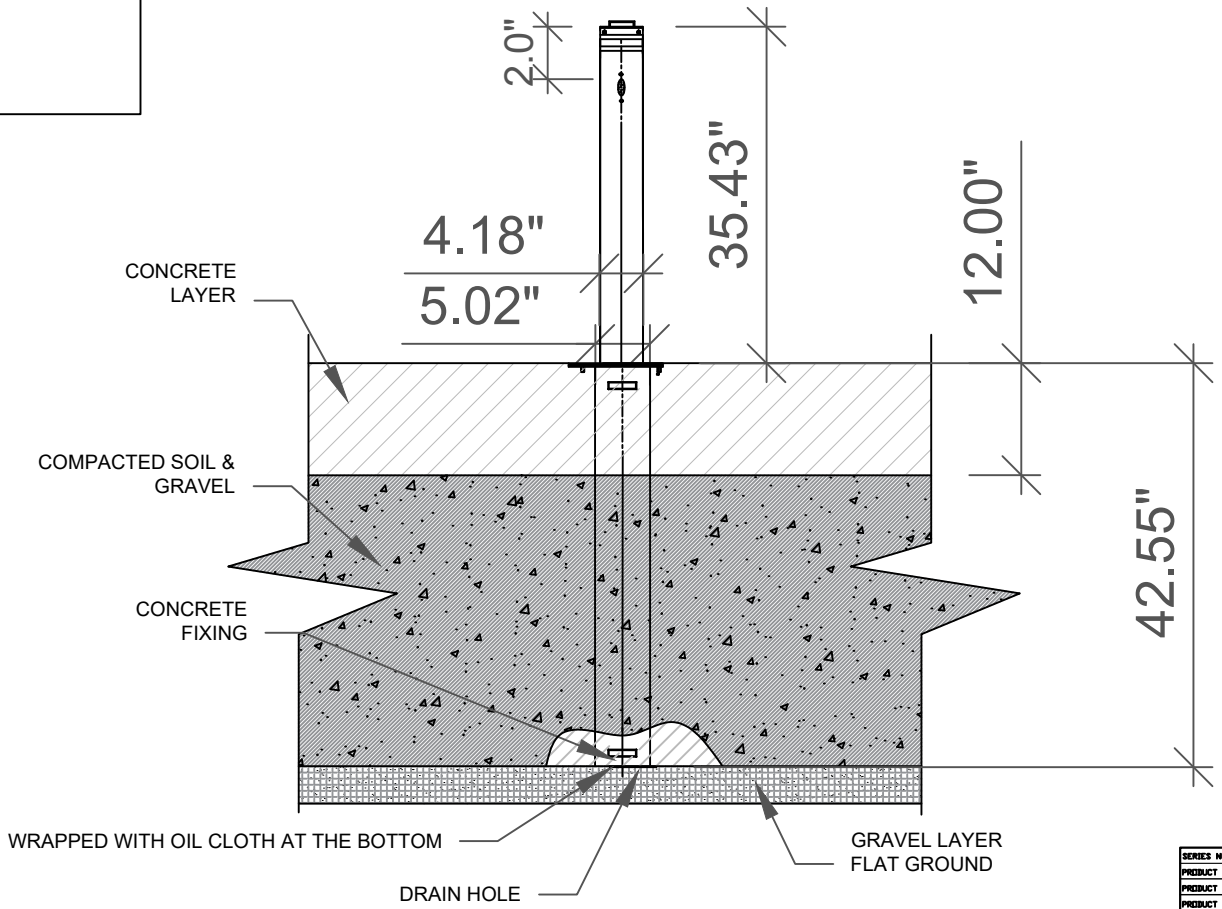

DUAL LOCKING

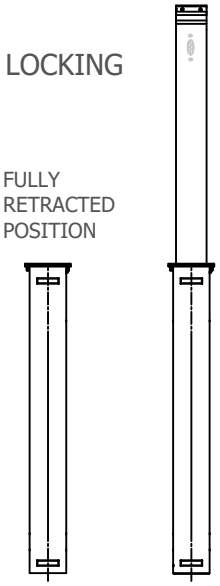

FLAT

APPLICATION	
NEXT ASSY	USED ON

SERIES NUMBER:	MR4000	CAGE CODE: MR4 / SIZE: 4	DRAWING NUMBER: MR40
PRODUCT FAMILY:	MANUAL RETRACTABLE		
PRODUCT CLASS:	STANDARD OR CUSTOMER DEFINED	DRAWN BY: AJA	DRAWING REV:
PRODUCT LINE:	BOLLARD	CHECKED BY:	SHEET: 1 OF 1
PRODUCT SUB LINE:	MANUAL RETRACTABLE	APPROVED BY:	RELEASE DATE: 1-3-2023

1-800-BOLLARDS, Inc.
10 Hughes Suite A105
Irvine, CA 92618
PHONE: 1-800-BOLLARDS
WEB: WWW.1800BOLLARDS.COM
EMAIL: INFO@1800BOLLARDS.COM

TITLE: BOLLARD, MANUAL RETRACTABLE

NOTES:
1. INSTALLATION TO BE COMPLETED IN ACCORDANCE WITH MANUFACTURER'S SPECIFICATIONS.
2. DO NOT SCALE DRAWING.
3. THIS DRAWING IS INTENDED FOR USE BY ARCHITECTS, ENGINEERS, CONTRACTORS, CONSULTANTS AND DESIGN PROFESSIONALS FOR PLANNING PURPOSES ONLY. THIS DRAWING
4. ALL INFORMATION CONTAINED HEREIN WAS CURRENT AT THE TIME OF DEVELOPMENT BUT MUST BE REVIEWED AND APPROVED BY THE PRODUCT MANUFACTURER TO BE CONSIDERED ACCURATE.